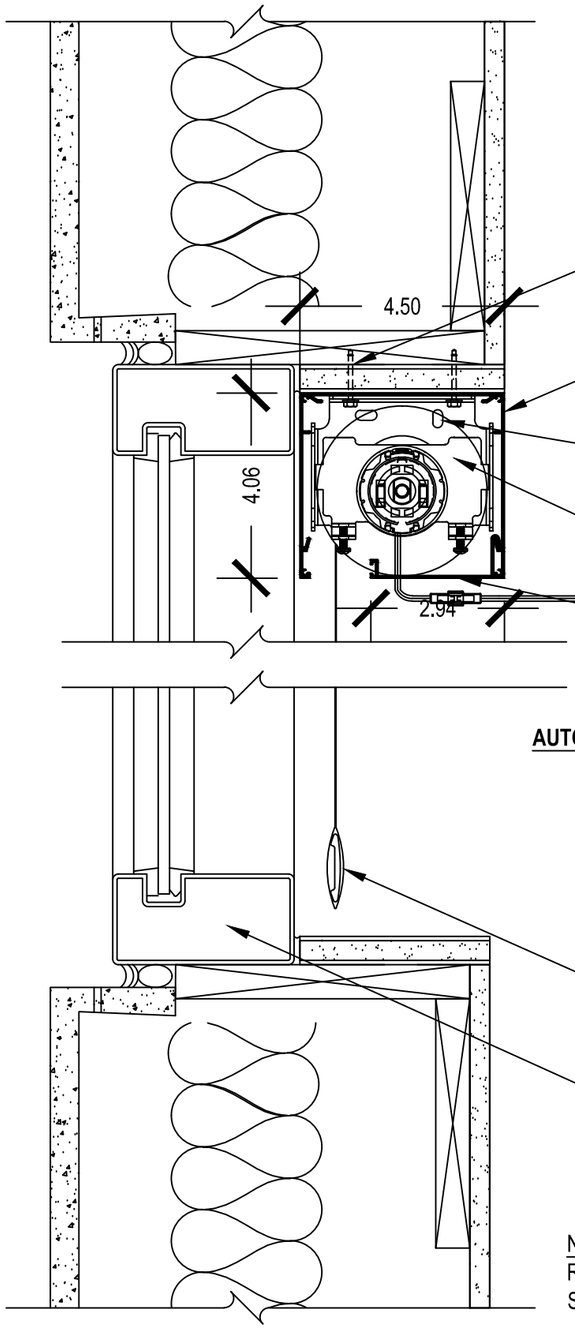

FINISHES, SUPPORTS, AND BLOCKING BY OTHERS

FASTENERS THROUGH BRACKET HOLES TO SOLID BLOCKING

ROLLEASE ACMEDA ALUMINUM POCKET

ROLLEASE ACMEDA MAX. ROLL DIAMETER 3.75"

RB88-2106-xxx003 ADJUSTABLE BRACKET

ROLLEASE ACMEDA ALUMINUM BOTTOM CLOSURE

AUTOMATED SHADES: DC WIRED MOTOR;
CONTROLLER OPTIONS:
WALL, HAND HELD, OR APP

ROLLEASE ACMEDA HEAT-WELDED HEM POCKET AND SHADE FABRIC

WINDOW SYSTEM BY OTHERS

NOTE:
REFER TO QUICK REFERENCE GUIDE AND SPECIFICATIONS FOR SELECTED PRODUCT LINE

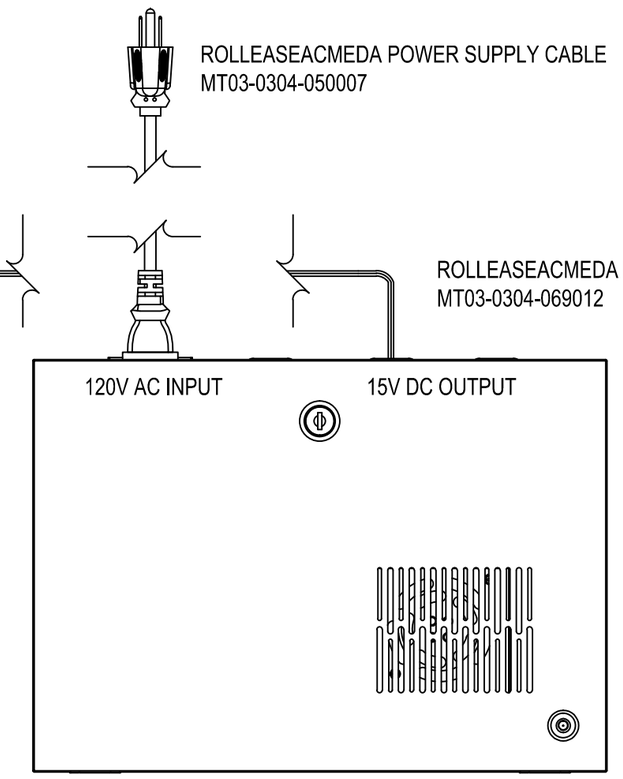

ROLLEASEACMEDA POWER SUPPLY CABLE
MT03-0304-050007

ROLLEASEACMEDA DCRF CONNECTION HARNESS
MT03-0304-069012

ROLLEASEACMEDA POWER SUPPLY MT03-0301-411005

CS1 4 IN POCKET SINGLE - PUNCH WINDOW

SCALE: 3"=1'-0" LOW VOLTAGE MOTOR

HEADER MOUNT

ROLLEASE ACMEDA

750 EAST MAIN ST.
STAMFORD, CT 06092
ROLLEASEACMEDACONTRACT.COM

ISSUE / REVISION DATE: